KOBERT-IN

Large format **WALL PANEL**
Revêtements **GRANDS FORMATS**
Panello murale di **GRANDE FORMATO**

BARIPERFIL®

EN KOBERT-IN

Kobert-In is a large-format wall cladding solution that combines design, innovation and functionality for demanding residential and commercial projects. Its structure, made from aluminium outer layers and a mineral core, provides a lightweight, durable and easy-to-handle solution.

Its technical composition ensures excellent dimensional stability, together with high resistance to fire and moisture.

Available in four different finishes, its high-definition designs provide depth, realism and outstanding decorative value to any space. A solution designed to renovate interiors quickly and cleanly, delivering a premium decorative finish, particularly suitable for bathrooms, showers, kitchens, hotels and residential projects.

AVAILABLE VERSIONS

Kobert-In FR

Water-resistant	**100%**
Reaction to fire	**Bs1d0**
Range	**8 designs**

Dimensions

High Gloss / Ultramatt	**2600 x 1200 x 4 mm**
Textured Matt	**2620 x 1220 x 4 mm**

Kobert-In PE

Water-resistant	**100%**
Reaction to fire	**Cs2d0**
Range	**37 designs**

Dimensions

High gloss / Ultramatte	**2550 x 1200 x 4 mm**
Text Matt / Wood Feel	**2570 x 1220 x 4 mm**
Unicolor	**2530 x 1180 x 4 mm**

(a excepción KB17 Blanco)

COLLECTIONS

The Kobert-In collection brings together a carefully curated selection of designs inspired by materials that have shaped architecture and interior design throughout history. Thanks to high-definition digital printing, each surface accurately recreates the visual richness of marble, stone, wood, cement and ceramic finishes, offering a wide range of possibilities for creating distinctive spaces.

The six collections — **Marble, Authentic, Concrete, Wood, Tiles and Unicolo**r — have been developed to suit different styles and requirements, from warm and natural interiors to contemporary, minimalist spaces or spaces with a strong architectural character.

ENDLESS CONTINUITY

Endless Continuity makes it possible to create seamless, visually striking surfaces by preventing abrupt breaks in the design between adjoining panels.

Each design includes different panel variations that reduce repetition while maintaining graphic continuity, regardless of the installation order. As a result, joints become virtually invisible, while installation, logistics and distribution are made simpler.

Scan the QR codes to view the instructions and installation video.

Instructions

Installation video

FR KOBERT-IN

Kobert-In est un revêtement mural grand format qui combine design, innovation et fonctionnalité pour les projets résidentiels et commerciaux. Sa structure composite, constituée de couches extérieures en aluminium et d'un noyau minéral, offre une solution légère, résistante et facile à manipuler.

Sa composition technique garantit une excellente stabilité dimensionnelle, ainsi qu'une résistance élevée au feu et à l'humidité.

Nos impressions haute définition, associées à nos quatre finitions, apportent profondeur et authenticité à tous vos espaces. Une solution conçue pour rénover les espaces rapidement et proprement, avec une finition à forte valeur décorative, particulièrement adaptée aux salles de bains, douches, cuisines, hôtels et projets résidentiels.

VERSIONS DISPONIBLES

Kobert-In FR

Hydrofuge	**100%**
Résistance au feu	**Bs1d0**
Gamme	**8 designs**

Dimensions

Brillant / Ultramat	**2600 x 1200 x 4 mm**
Mat texturé	**2620 x 1220 x 4 mm**

Kobert-In PE

Hydrofuge	**100%**
Résistance au feu	**Cs2d0**
Gamme	**37 designs**

Dimensions

Brillant / Ultramat	**2550 x 1200 x 4 mm**
Mat text / Wood Feel	**2570 x 1220 x 4 mm**
Unicolor	**2530 x 1180 x 4 mm**

(à l'exception de KB17 Blanc)

COLLECTIONS

La collection Kobert-In réunit une sélection soignée de décors inspirés de matériaux qui ont marqué l'architecture et le design d'intérieur.Grâce à l'impression numérique haute définition, chaque surface reproduit avec précision la richesse visuelle des marbres, pierres, bois, ciments et finitions céramiques, offrant une grande variété de possibilités pour créer des espaces dotés de leur propre identité.

Les six collections —**Marble, Authentic, Concrete, Wood, Tiles et Unicolor**— ont été conçues pour s'adapter à différents styles et besoins, des ambiances chaleureuses et naturelles aux propositions contemporaines, minimalistes ou d'inspiration culturelle.

ENDLESS CONTINUITY

Endless Continuity permet de créer des surfaces continues et visuellement saisissantes, en évitant les ruptures graphiques au niveau des jonctions entre les panneaux.

Chaque décor comprend différentes variantes qui réduisent la répétition et maintiennent la continuité du design, indépendamment de l'ordre d'installation. Les jonctions passent ainsi inaperçues et le montage, la logistique et la distribution sont simplifiés.

Scannez les QR pour consulter les instructions et la vidéo d'installation.

Instructions

Vidéo d'installation

IT KOBERT-IN

Kobert-In è un rivestimento murale di grande formato che combina design, innovazione e funzionalità per progetti residenziali e commerciali. La sua struttura composita, costituita da strati esterni in alluminio e da un nucleo minerale, offre una soluzione leggera, resistente e facile da maneggiare.

La sua composizione tecnica garantisce un'eccellente stabilità dimensionale, oltre a un'elevata resistenza al fuoco e all'umidità.

I suoi design ad alta definizione, disponibili in quattro diverse finiture, conferiscono profondità, realismo e un grande valore decorativo a qualsiasi spazio. Una soluzione pensata per rinnovare gli ambienti in modo rapido e pulito, con una finitura di elevato valore decorativo, particolarmente indicata per bagni, docce, cucine, hotel e progetti residenziali.

VERSIONS DISPONIBLES

Kobert-In FR

Idrorepellente	**100%**
Resistenza al fuoco	**Bs1d0**
Gamma	**8 design**

Dimensioni

Lucido / Ultramatt	**2600 x 1200 x 4 mm**
Opaco testurizzato	**2620 x 1220 x 4 mm**

Kobert-In PE

Idrorepellente	**100%**
Resistenza al fuoco	**Cs2d0**
Gamma	**37 design**

Dimensioni

Lucido / Ultramatt	**2550 x 1200 x 4 mm**
Opaco test / Wood Feel	**2570 x 1220 x 4 mm**
Unicolor	**2530 x 1180 x 4 mm**

(ad eccezione di KB17 Bianco)

COLLEZIONI

La collezione Kobert-In riunisce un'accurata selezione di design ispirati a materiali che hanno caratterizzato l'architettura e l'interior design nel corso della storia. Grazie alla stampa digitale ad alta definizione, ogni superficie riproduce con precisione la ricchezza visiva di marmi, pietre, legni, cementi e finiture ceramiche, offrendo un'ampia varietà di possibilità per creare spazi con una propria identità.

Le sei collezioni —**Marble, Authentic, Concrete, Wood, Tiles e Unicolor**— sono state concepite per adattarsi a stili ed esigenze differenti, dagli ambienti caldi e naturali alle proposte contemporanee, minimaliste o di ispirazione culturale.

ENDLESS CONTINUITY

Endless Continuity consente di creare superfici continue e di grande impatto visivo, evitando interruzioni grafiche nelle giunzioni tra i pannelli.

Ogni decorativo include diverse varianti che riducono la ripetizione e mantengono la continuità del design, indipendentemente dall'ordine di installazione. In questo modo, le giunzioni passano inosservate e vengono semplificati il montaggio, la logistica e la distribuzione.

Scansiona i codici QR per consultare le istruzioni e il video di installazione.

Istruzioni

Video di installazione

FINISHES / FINITIONS / FINITURE

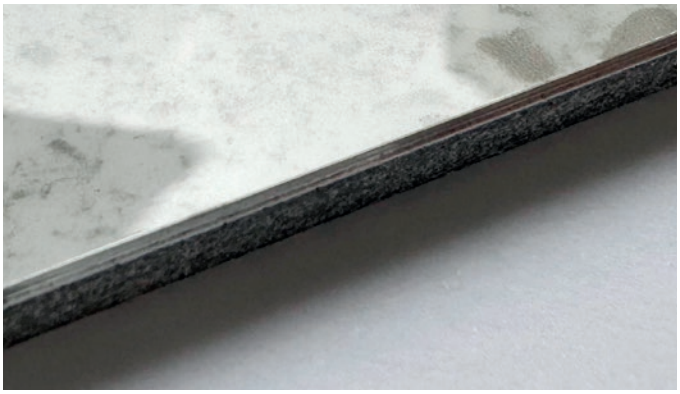

HIGH GLOSS | HAUTE BRILLANCE | ALTA LUCENTEZZA

EN An exceptionally glossy and reflective surface finish that creates a luxurious, elegant appearance, similar to the visual effect of polished stone.

FR Finition de surface extrêmement brillante et réfléchissante, créant un aspect luxueux et élégant, similaire aux effets de la pierre polie.

IT Finitura superficiale estremamente lucida e riflettente, che crea un aspetto lussuoso ed elegante, simile agli effetti della pietra levigata.

ULTRAMATT | ULTRAMAT | ULTRAMATT

EN An exceptionally soft and uniform surface finish. Its complete absence of reflections creates a modern and highly refined appearance.

FR Finition de surface extrêmement douce et uniforme. L'absence totale de reflets crée un aspect moderne et attrayant.

IT Finitura superficiale estremamente morbida e uniforme. La totale assenza di riflessi crea un aspetto moderno e accattivante.

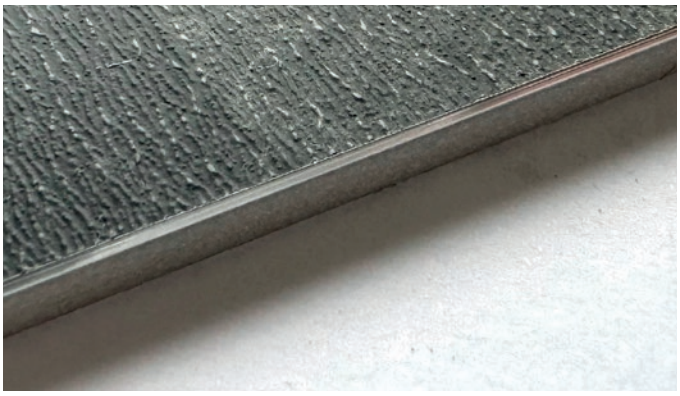

TEXTURED MATT | MAT TEXTURÉ | OPACO TESTURIZZATO

EN A surface finish with a strong matt appearance and a textured finish that perfectly imitates both the visual appearance and the feel of surfaces found in nature.

FR Finition de surface à l'aspect mat intense et à la texture rugueuse qui imite parfaitement aussi bien l'apparence visuelle que le toucher des surfaces que l'on trouve dans la nature.

IT Finitura superficiale dall'intenso aspetto opaco e con una texture ruvida che imita perfettamente sia l'aspetto visivo sia il tatto delle superfici presenti in natura.

WOOD FEEL | WOOD FEEL | WOOD FEEL

EN A matt finish that simulates the natural grain of wood. A surface that not only visually imitates wood, but also evokes it through touch, blurring the boundaries between the natural and the printed.

FR Finition mate qui reproduit les veines naturelles du bois. Une surface qui ne se contente pas d'imiter visuellement le bois, mais qui l'évoque également au toucher, estompant les limites entre le naturel et l'imprimé.

IT Finitura opaca che riproduce le venature naturali del legno. Una superficie che non solo imita visivamente il legno, ma lo evoca anche al tatto, attenuando i confini tra il naturale e lo stampato.

KB01 Mud

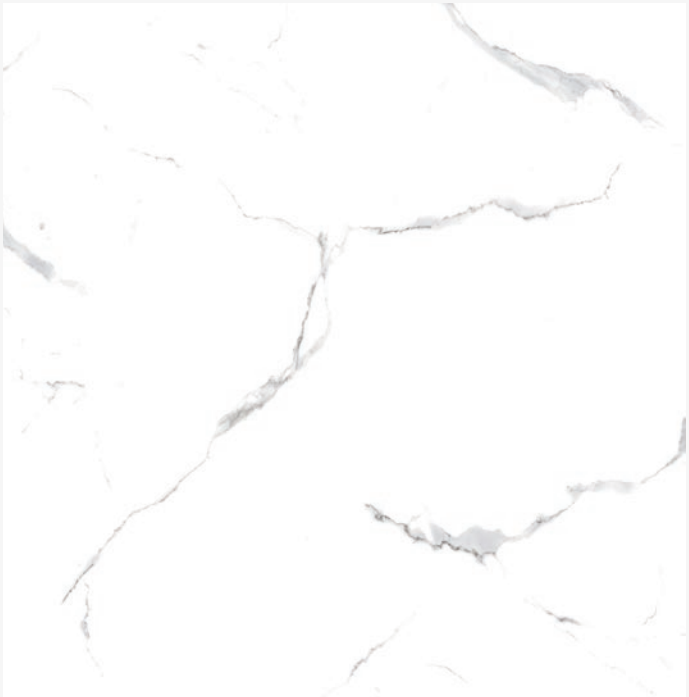

PANEL TYPE	FINISH	DIMENSIONS	PRODUCT REFERENCE
PE	High gloss	2550 x 1200 x 4 mm	Kobertin PE KB 01 MUD High gloss
	Textured matt	2570 x 1220 x 4 mm	Kobertin PE KB 01 MUD Textured matt
FR +	High gloss	2600 x 1200 x 4 mm	Kobertin FR KB 01 MUD High gloss

KB85 Carrara

PANEL TYPE	FINISH	DIMENSIONS	PRODUCT REFERENCE
PE	High gloss	2550 x 1200 x 4 mm	Kobertin PE KB 85 CARRARA High gloss
	Ultramatte	2550 x 1200 x 4 mm	Kobertin PE KB 85 CARRARA Ultramatte
FR +	High gloss	2600 x 1200 x 4 mm	Kobertin FR KB 85 CARRARA High gloss

KB46 Calacata gold

PANEL TYPE	FINISH	DIMENSIONS	PRODUCT REFERENCE
PE	High gloss	2550 x 1200 x 4 mm	Kobertin PE KB 46 CALACATA GOLD High gloss
	Ultramatte	2550 x 1200 x 4 mm	Kobertin PE KB 46 CALACATA GOLD Ultramatte
FR +	High gloss	2600 x 1200 x 4 mm	Kobertin FR KB 46 CALACATA GOLD High gloss

KB59 Sandstorm

PANEL TYPE	FINISH	DIMENSIONS	PRODUCT REFERENCE
PE	High gloss	2550 x 1200 x 4 mm	Kobertin PE KB 59 SANDSTORM High gloss

KB92 Glacier

PANEL TYPE	FINISH	DIMENSIONS	PRODUCT REFERENCE
PE	High gloss	2550 x 1200 x 4 mm	Kobertin PE KB 92 GLACIER High gloss
	Ultramatte	2550 x 1200 x 4 mm	Kobertin PE KB 92 GLACIER Ultramatte
FR +	High gloss	2600 x 1200 x 4 mm	Kobertin FR KB 92 GLACIER High gloss

KB57 Everest

PANEL TYPE	FINISH	DIMENSIONS	PRODUCT REFERENCE
PE	Textured matt	2570 x 1220 x 4 mm	Kobertin PE KB 57 EVEREST Textured matt
	Ultramatte	2550 x 1200 x 4 mm	Kobertin PE KB 57 EVEREST Ultramatte

KB29 Sabana

PANEL TYPE	FINISH	DIMENSIONS	PRODUCT REFERENCE
PE	High gloss	2550 x 1200 x 4 mm	Kobertin PE KB 29 SABANA High gloss

KB101 Nocturna

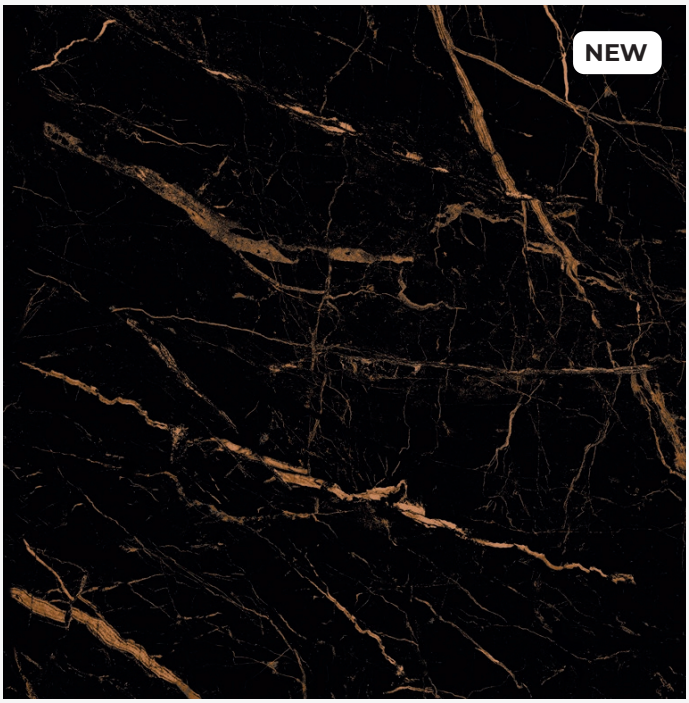

PANEL TYPE	FINISH	DIMENSIONS	PRODUCT REFERENCE
PE	High gloss	2550 x 1200 x 4 mm	Kobertin PE KB 101 NOCTURNA High gloss

KB03 Infinite

PANEL TYPE	FINISH	DIMENSIONS	PRODUCT REFERENCE
PE	High gloss	2550 x 1200 x 4 mm	Kobertin PE KB 03 INFINITE High gloss
	Textured matt	2570 x 1220 x 4 mm	Kobertin PE KB 03 INFINITE Textured matt

KB83 Tramonto

PANEL TYPE	FINISH	DIMENSIONS	PRODUCT REFERENCE
PE	Ultramatte	2550 x 1200 x 4 mm	Kobertin PE KB 83 TRAMONTO Ultramatte
FR +	Ultramatte	2600 x 1200 x 4 mm	Kobertin FR KB 83 TRAMONTO Ultramatte

KB29 Sabana Bookmatch A

PANEL TYPE	FINISH	DIMENSIONS	PRODUCT REFERENCE
PE	High gloss	2550 x 1200 x 4 mm	Kobertin PE KB 29A SABANA-BKMA High gloss
			Kobertin PE KB 29B SABANA-BKMB High gloss

IT **KB29 Sabana Bookmatch** è un design composto da due pannelli simmetrici **—A e B—** che permettono di creare un effetto specchio. Può essere installato in diverse sequenze, come KB29A + KB29B, KB29B + KB29A o KB29A + KB29B + KB29A, **e può inoltre essere abbinato a una qualsiasi delle cinque varianti del modello standard KB29 Sabana.**

KB29 Sabana Bookmatch B

EN **KB29 Sabana Bookmatch** is a design made up of two symmetrical panels **—A and B—** that create a mirror effect. It can be installed in different sequences, such as KB29A + KB29B, KB29B + KB29A or KB29A + KB29B + KB29A, and **can also be combined with any of the five variants of the standard KB29 Sabana design.**

FR **KB29 Sabana Bookmatch** est un design composé de deux panneaux symétriques **—A et B—** permettant de créer un effet miroir. Il peut être installé selon différentes séquences, telles que KB29A + KB29B, KB29B + KB29A ou KB29A + KB29B + KB29A, **et peut également être combiné avec l'une des cinq variantes du modèle standard KB29 Sabana.**

KB09 Chronic

PANEL TYPE	FINISH	DIMENSIONS	PRODUCT REFERENCE
PE	Textured matt	2570 x 1220 x 4 mm	Kobertin PE KB 09 CHRONIC Textured matt

KB23 Concrete B

PANEL TYPE	FINISH	DIMENSIONS	PRODUCT REFERENCE
PE	Textured matt	2570 x 1220 x 4 mm	Kobertin PE KB 23 CONCRETE B Textured matt
FR +	Textured matt	2620 x 1220 x 4 mm	Kobertin FR KB 23 CONCRETE B Textured matt

KB34 Urban Concrete

PANEL TYPE	FINISH	DIMENSIONS	PRODUCT REFERENCE
PE	Textured matt	2570 x 1220 x 4 mm	Kobertin PE KB 34 URBAN CONCRETE Textured matt

KB95 Taiga

PANEL TYPE	FINISH	DIMENSIONS	PRODUCT REFERENCE
PE	Wood feel	2570 x 1220 x 4 mm	Kobertin PE KB 95 TAIGA Wood feel

KB93 Solen Oak

PANEL TYPE	FINISH	DIMENSIONS	PRODUCT REFERENCE
PE	Wood feel	2570 x 1220 x 4 mm	Kobertin PE KB 93 SOLEN OAK Wood feel

KB94 Walnut

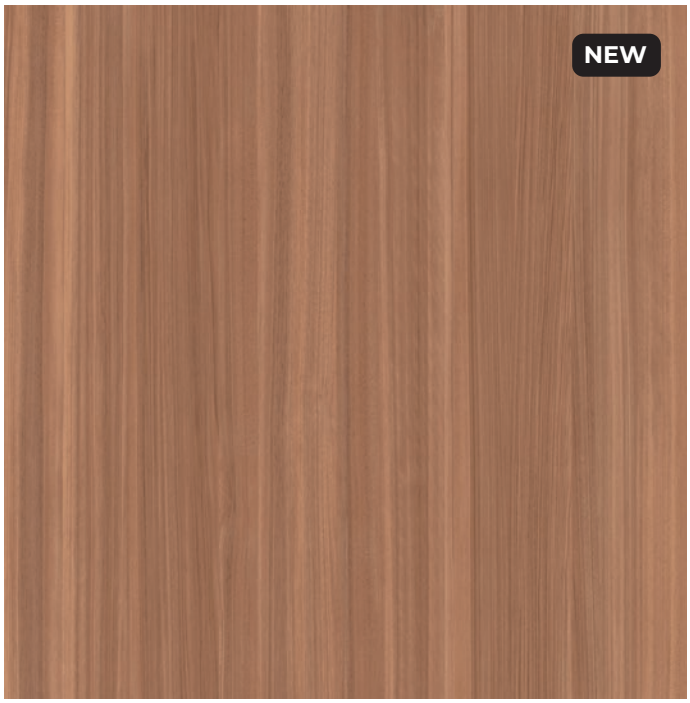

PANEL TYPE	FINISH	DIMENSIONS	PRODUCT REFERENCE
PE	Wood feel	2570 x 1220 x 4 mm	Kobertin PE KB 94 WALNUT Wood feel

KB89 Coventry oak

PANEL TYPE	FINISH	DIMENSIONS	PRODUCT REFERENCE
PE	Wood feel	2570 x 1220 x 4 mm	Kobertin PE KB 89 COVENTRY Wood feel

Tile Collection

KB87 Marlin

PANEL TYPE	FINISH	DIMENSIONS	PRODUCT REFERENCE
PE	High gloss	2550 x 1200 x 4 mm	Kobertin PE KB 87 MARLIN High gloss

KB96 Viridian

PANEL TYPE	FINISH	DIMENSIONS	PRODUCT REFERENCE
PE	High gloss	2550 x 1200 x 4 mm	Kobertin PE KB 96 VIRIDIAN High gloss

Authentic Collection

KB97 Travertine

PANEL TYPE	FINISH	DIMENSIONS	PRODUCT REFERENCE
PE	Textured matt	2570 x 1220 x 4 mm	Kobertin PE KB 97 TRAVERTINE Textured matt

KB88 Dune

PANEL TYPE	FINISH	DIMENSIONS	PRODUCT REFERENCE
PE	Textured matt	2570 x 1220 x 4 mm	Kobertin PE KB 88 DUNE Textured matt

KB90 Sienna

PANEL TYPE	FINISH	DIMENSIONS	PRODUCT REFERENCE
PE	Textured matt	2570 x 1220 x 4 mm	Kobertin PE KB 90 SIENNA Textured matt

KB11 Manson

PANEL TYPE	FINISH	DIMENSIONS	PRODUCT REFERENCE
PE	Textured matt	2570 x 1220 x 4 mm	Kobertin PE KB 11 MANSON Textured matt

KB100 Ferrum

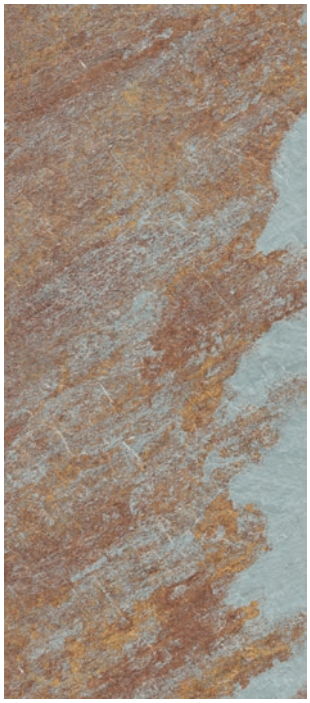

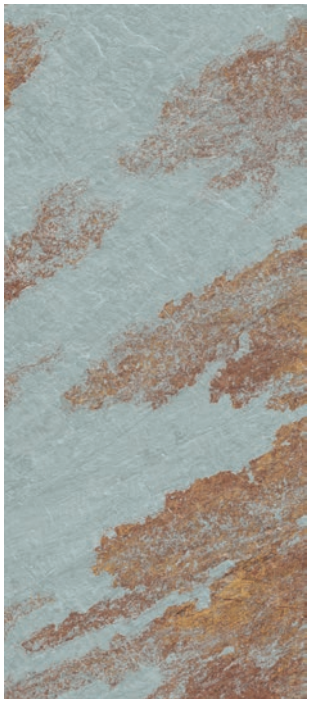

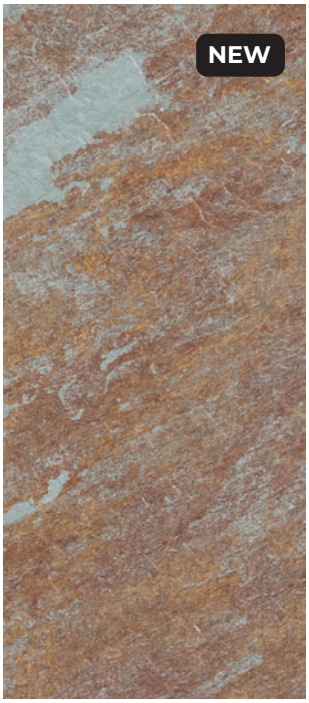

PANEL TYPE	FINISH	DIMENSIONS	PRODUCT REFERENCE
PE	Textured matt	2570 x 1220 x 4 mm	Kobertin PE KB 100A FERRUM Textured matt
			Kobertin PE KB 100B FERRUM Textured matt
			Kobertin PE KB 100C FERRUM Textured matt

EN **KB100 Ferrum** es un diseño compuesto por 3 paneles — **A, B y C** — pensado para crear un efecto visual infinito. A diferencia de otros conceptos modulares, aquí el orden de instalación es fijo y debe respetarse siempre la secuencia: **A - B - C - A.**

FR **KB100 Ferrum** est un design composé de trois panneaux —**A, B et C**— conçu pour créer un effet visuel infini. Contrairement à d'autres concepts modulaires, l'ordre d'installation est fixe et la séquence doit toujours être respectée : **A - B - C - A.**

IT **KB100 Ferrum** è un design composto da tre pannelli —**A, B e C**— pensato per creare un effetto visivo infinito. A differenza di altri concetti modulari, l'ordine di installazione è fisso e deve essere sempre rispettata la sequenza: **A - B - C - A.**

KB78 Nude

KB91 Terra

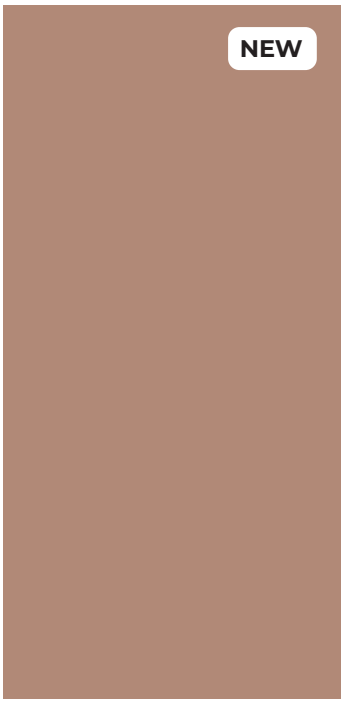

KB76 Basalto

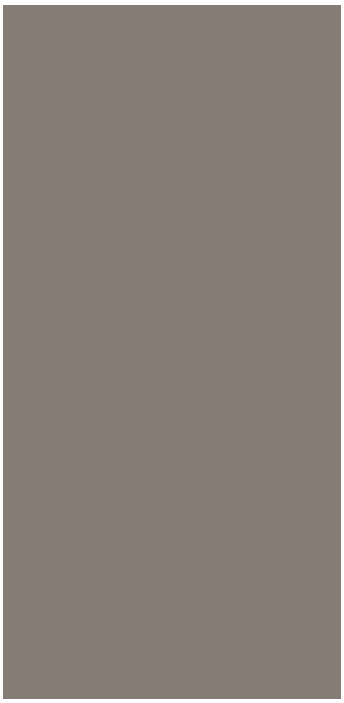

KB67 Negro

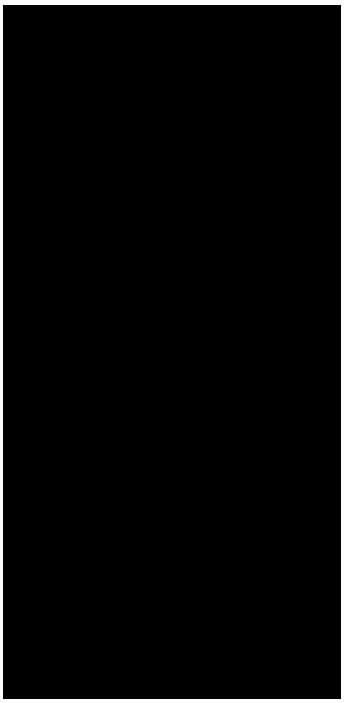

PANEL TYPE	FINISH	DIMENSIONS	PRODUCT REFERENCE
PE	Ultramatte	2530 x 1180 x 4 mm	Kobertin PE KB 78 NUDE Ultramatte
			Kobertin PE KB 91 TERRA Ultramatte

PANEL TYPE	FINISH	DIMENSIONS	PRODUCT REFERENCE
PE	Ultramatte	2530 x 1180 x 4 mm	Kobertin PE KB 76 BASALTO Ultramatte
			Kobertin PE KB 67 NEGRO Ultramatte

KB17 Blanco

PANEL TYPE	FINISH	DIMENSIONS	PRODUCT REFERENCE
PE	High gloss	2550 x 1200 x 4 mm	Kobertin PE KB 17 BLANCO High gloss
	Ultramatte	2550 x 1200 x 4 mm	Kobertin PE KB 17 BLANCO Ultramatte

PANEL TYPE	FINISH	DIMENSIONS	PRODUCT REFERENCE
FR +	High gloss	2600 x 1200 x 4 mm	Kobertin FR KB 17 BLANCO High gloss
	Ultramatte	2600 x 1200 x 4 mm	Kobertin FR KB 17 BLANCO Ultramatte

EN ACCESSORIES

AVAILABLE PROFILES

Kobert-In has aluminium profiles available to facilitate the finishing of installations. The profiles are made of anodized aluminium and are completely water-resistant.

The available range of profiles is as follows:

322 Round finish	**344** Square finish	**30A** Seam joint	**343** Inside corner	**342** Edge profile
Large - 2700mm	**Large - 2700mm**	**Large - 2700mm**	**Large - 2700mm**	**Large - 2700mm**

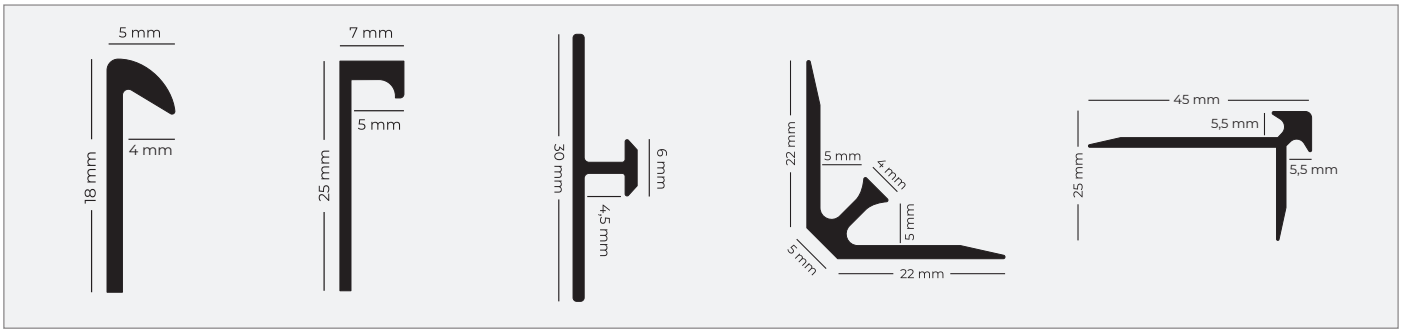

AVAILABLE COLOURS

The profiles are available in aluminium, black, white and gold finishes according to the following table.

	322 Round finish	**344** Square finish	**30A** Seam joint	**343** Inside corner	**342** Edge profile
Aluminium	•	•	•	•	•
White		•	•	•	•
Black		•	•	•	•
Gold		•	•	•	•

ADHESIVES

Mapeflex MS45

· High-modulus hybrid adhesive. Formulated with silylated polymers.
· Ideal for short- and long-term fixing
· Suitable for damp substrates
· Gun application
· Approximate yield: 1.5 cartridges per panel

SEALANTS

Mapesil AC

· Pure acetic silicone sealant resistant to mould and moisture.
· Available in matching colours and semi-gloss finish
· Gun application
· Approximate yield: 20 linear metres per cartridge

Mapesil Tile Matt

· Neutral silicone sealant resistant to mould and moisture.
· Available in matching colours and matt finish
· Gun application
· Approximate yield: 20 linear metres per cartridge

REFERENCE	PRODUCT TYPE	USE	PERFORMANCE
Mapeflex MS45	Adhesive	Full panel	1.5 cartridges/panel
Mapesil AC	Gloss sealant (SB)	In joints	20 linear metres/cartridge
Mapesil Tile Matt	Matt sealant (SM)	In joints	20 linear metres/cartridge

LEVELLING SYSTEM

Adjustable levelling system

· Kobert-In has levelling systems that help align the panels, especially on walls with slight irregularities.

FR ACCESSOIRES

PROFILÉS DISPONIBLES

Kobert-In dispose de profilés en aluminium pour faciliter les finitions des installations. Les profilés sont fabriqués en aluminium anodisé et sont totalement résistants à l'eau.

La gamme de profilés disponibles est la suivante :

322 Finition arrondie	**344** Finition droite	**30A** Jointure droite	**343** Coin rentrant	**342** Coin sortant
Largeur - 2700mm	**Largeur - 2700mm**	**Largeur - 2700mm**	**Largeur - 2700mm**	**Largeur - 2700mm**

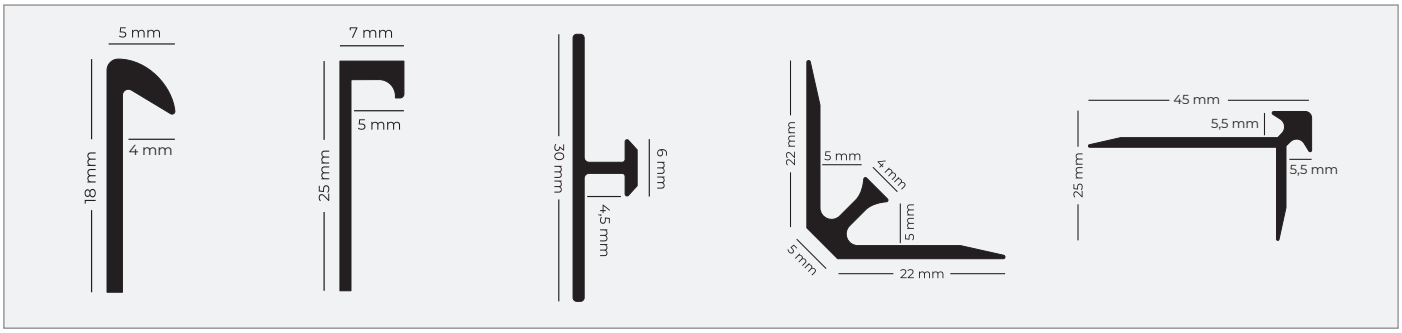

COULEURS DISPONIBLES

Les profilés sont disponibles en finition aluminium, noir, blanc et doré selon le tableau suivant.

	322 Finition arrondie	**344** Finition droite	**30A** Jointure droite	**343** Coin rentrant	**342** Coin sortant
Aluminium	•	•	•	•	•
Blanc		•	•	•	•
Noir		•	•	•	•
Doré		•	•	•	•

ADHÉSIFS

Mapeflex MS45

· Adhésif hybride à haut module d'élasticité.
· Idéal pour une fixation à court et à long terme
· Convient aux environnements humides
· Application au pistolet
· Rendement recommandé : 1,5 cartouche par panneau

MASTICS

Mapesil AC

· Mastic en silicone acétique pur résistant aux moisissures et à l'humidité.
· Disponible en couleurs assorties et en finition semi-brillante
· Application au pistolet
· Rendement approximatif : 20 mètres linéaires par cartouche

Mapesil Tile Matt

· Mastic en silicone neutre résistant aux moisissures et à l'humidité.
· Disponible en couleurs assorties et en finition mate
· Application au pistolet
· Rendement approximatif : 20 mètres linéaires par cartouche

RÉFÉRENCE	TYPE DE PRODUIT	USAGE	RENDEMENT
Mapeflex MS45	Adhésif	Panneau entier	1,5 cartouche/panneau
Mapesil AC	Mastic brillant (SB)	Dans les joints	20 mètres linéaires/cartouche
Mapesil Tile Matt	Mastic mat (SM)	Dans les joints	20 mètres linéaires/cartouche

SYSTÈME DE NIVELLEMENT

Système de nivellement réglable

· Kobert-In dispose de systèmes de nivellement qui aideront à aligner les panneaux, en particulier sur les murs présentant de légères irrégularités.

IT ACCESSORI

PROFILI DISPONIBILI

Kobert-In dispone di profili in alluminio per facilitare le finiture delle installazioni. I profili sono realizzati in alluminio anodizzato e sono completamente resistenti all'acqua.

La gamma di profili disponibili è la seguente:

322	344	30A	343	342
Finitura arrotondata	Finitura quadrata	Giunto piatto	Angolo interno	Angolo esterno
Lunghezza - 2700mm	**Lunghezza - 2700mm**	**Lunghezza - 2700mm**	**Lunghezza - 2700mm**	**Lunghezza - 2700mm**

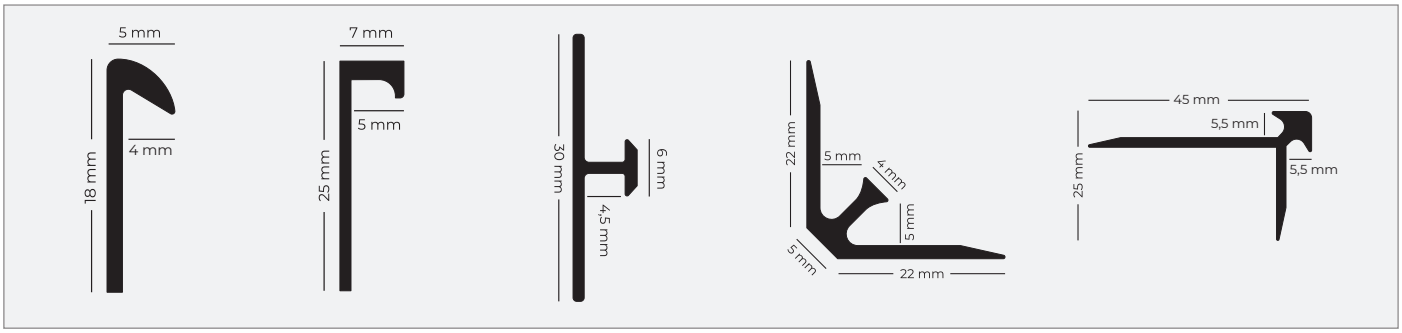

COLORI DISPONIBILI

I profili sono disponibili con finitura alluminio, nero, bianco e oro secondo la seguente tabella.

	322 Finitura arrotondata	344 Finitura quadrata	30A Giunto piatto	343 Angolo interno	342 Angolo esterno
Alluminio	•	•	•	•	•
Bianco		•	•	•	•
Nero		•	•	•	•
Oro		•	•	•	•

ADESIVI

Mapeflex MS45

· Adesivo ibrido ad alto modulo elastico. Formulato con polimeri sililati.
· Ideale per un fissaggio a breve e lungo termine
· Adatto a supporti umidi
· Applicazione con pistola
· Resa approssimativa: 1,5 cartucce per pannello

SIGILLANTI

Mapesil AC

· Sigillante in silicone acetico puro resistente a muffa e umidità.
· Disponibile in colori coordinati e con finitura semilucida
· Applicazione con pistola
· Resa approssimativa: 20 metri lineari per cartuccia

Mapesil Tile Matt

· Sigillante in silicone neutro resistente a muffa e umidità.
· Disponibile in colori coordinati e con finitura opaca
· Applicazione con pistola
· Resa approssimativa: 20 metri lineari per cartuccia

RIFERIMENTO	TIPO DI PRODOTTO	USO	RESA
Mapeflex MS45	Adesivo	Pannello intero	1,5 cartucce/pannello
Mapesil AC	Sigillante lucido (SB)	Nelle giunzioni	20 metri lineari/cartuccia
Mapesil Tile Matt	Sigillante opaco (SM)	Nelle giunzioni	20 metri lineari/cartuccia

SISTEMA DI LIVELLAMENTO

Sistema di livellamento regolabile

· Kobert-In dispone di sistemi di livellamento che aiutano ad allineare i pannelli, soprattutto su pareti con lievi irregolarità.

COLLECTION | COLLECTION | COLLEZIONE 2026

		PANEL TYPE PE				PANEL TYPE FR		
DESIGNS		High gloss	Textured matt	Ultramatte	Wood feel	High gloss	Textured matt	Ultramatte
	KB01 Mud	•	•			•		
	KB85 Carrara	•		•		•		
	KB92 Glacier	•		•		•		
	KB46 Calacata gold	•		•		•		
	KB59 Sandstorm	•						
	KB57 Everest		•	•				
	KB29 Sabana	•						
	KB29 Sabana Bookmatch	•						
	KB03 Infinite	•	•					
	KB83 Tramonto			•				•
	KB101 Nocturna	•						
	KB09 Chronic		•					
	KB23 Concrete B		•				•	
	KB34 Urban concrete		•					
	KB89 Coventry oak				•			
	KB93 Solen Oak				•			
	KB94 Walnut				•			
	KB95 Taiga				•			
	KB87 Marlin	•						
	KB96 Viridian	•						
	KB11 Manson		•					
	KB88 Dune		•					
	KB90 Sienna		•					
	KB97 Travertine		•					
	KB100 Ferrum		•					
	KB17 Blanco	•		•		•		•
	KB78 Nude			•				
	KB76 Basalto			•				
	KB91 Terra			•				
	KB67 Negro			•				

The references listed in the table are available from a minimum order of one panel.
If a finish or panel type not included in the standard collection mentioned above is required, the minimum order quantity for special production is 25 panels, except for the Unicolor collection, for which the minimum order is 50 panels.
For custom designs, please consult your sales representative in advance.

TECHNICAL DATA

CHARACTERISTICS	KOBERT-IN FR			KOBERT-IN PE			NORM
	Textured matt	High gloss	Ultramatte	Textured matt / WOOD FEEL	High gloss	Ultramatte	
Panel dimensions (height x width x thickness)	2620x1220x4	2600x1200x4	2600x1200x4	2570x1220x4	2550x1200x4	2550x1200x4	
Dimensions **Unicolor · Nude, Basalto, Terra & Negro**	-	-	-	-	-	2530x1180x4	
Fire resistance	BS1D0			CS2D0			EN 13501-1 2007+A1 2010
Cold liquid resistance	5	5	5	5	5	5	UNE-EN 12720 09 +A1 2014
- Ball drop test (1)							
- Height in mm	>2000	>2000	>2000	>2000	>2000	>2000	UNE-EN 14323 2017
- Foodprint diameter mm	<10	<10	<10	<10	<10	<10	
Scratch resistance A (N) method	>20	>13	>20	>20	>13	>20	UNE - EN 15186 2012 A METHOD
Bacterial resistance	0	0	0	0	0	0	EN ISO 846 1997
Water vapour resistance (grade)	5			5			UNE-EN 14323 2017
Resistance to wet heat at 85°C	5			5			UNE - EN 12721 09 + A1 2014
Resistance to wet heat at 100°C	5			5			UNE - EN 12721 09 + A1 2014
Aluminium thickness	0.3			0.2			DIN 1784
Weight	6,3 kg/m²			5,8 kg/m²			
Linear thermal expansion	2,4 a 100°C mm/m			2,4 a 100°C mm/m			EN1999 1-1 (Difference T° °c)
Coefficient of heat trasnfer U	5,48 W/m2K			5,48 W/m2K			DIN 4108
Temperature range	(-50°C + 80°C)			(-50°C + 60°C)			
Corrosion (240h)	No changes			No changes			UNE EN 14428 / UNE EN 9227
Cleaning suitability (2)	5			5			UNE EN 14428 / UNE EN 12720
Resistance to chemicals and stains (3)	No changes			No changes			UNE EN 14428
Voc emission test package including odour test (Indoor Air Europe Superior) (4)	A+			A+			EN 16516

(1) The impact resistance of the cladding has been considered rather than that of the PANEL TYPE panel itself, as no cracks or indentations larger than 10 mm occur at this drop height. However, the PANEL TYPE panel shows flatness deformation at lower drop heights, which is particularly noticeable in the High Gloss sample.
(2) Products tested: bleach, vinegar, 96% alcohol, cleaning alcohol, white spirit, ammonia, Viakal and Fairy. In the case of white spirit, the result is 4.
(3) The products tested are: acetic acid (10%), sodium hydroxide (10%), ethanol (70%), bleach and methylene blue.
(4) French, Italian and Belgian labels, AgBB, M1, DICL, WELL, LEED v4.1, BREEAM International, BREEAM Norway, BREEAM NL, SINTEF and ECOproduct VOC.

Scan the QR codes to view the technical data sheet in French and Italian.

Technical data French

Technical data Italian

www.bariperfil.com

CENTRAL SANTA BÁRBARA (Tarragona)
Camino Frailes s/n, 43570 Santa Bárbara
Tel - 977 71 80 00
Email - bariperfil@bariperfil.es

BARIPERFIL VILADECANS
Calle de la Agricultura
Nave 23 sector B, 08840 Viladecans Barcelona
Tel - 936 11 15 42
Email - viladecans@bariperfil.es

BARIPERFIL BARCELONA
Calle Maresme 107-109
(Parc ind. urbà del Poble Nou), 08019 Barcelona
Tel - 933 45 22 09
Email - barcelona@bariperfil.es

BARIPERFIL GIRONA
Calle Amnistía Internacional 9, 17190 Salt
Tel - 972 23 34 04
Email - girona@bariperfil.es

BARIPERFIL ALICANTE
C/ Río Júcar 24, 03007 Alicante
Tel - 965 50 95 49
Email - alicante@bariperfil.es

BARIPERFIL MÁLAGA
P.I. El Viso, Av. José Ortega y Gasset 288-290,
29006 Málaga
Tel - 952 00 97 43
Email - malaga@bariperfil.es

BARIPERFIL MADRID
Calle Puerto de Navacerrada 104, 28935 Móstoles
Tel - 916 65 88 88
Email - madrid@bariperfil.es